Metallized Polyester Film Capacitors - AC use

RoHS

AMPE Series (Radial Dipped)

MERITEK

FEATURES

- Excellent self-healing properties guarantee high reliability
- Not susceptible to the stress caused by excessive voltage
- Non-inductive construction
- Flame retardant epoxy resin coating (In compliance with UL 94V-0)

SPECIFICATIONS

1. Operating temperature: -40°C to +85°C
2. Capacitance range: 0.01μF to 4.7μF
3. Capacitance tolerance: ±5%(J), ±10%(K), ±20%(M)
4. Rated voltage: 160VAC, 250VAC
5. Dissipation factor: 1.0% max. at 1KHz, 25°C
6. Insulation resistance: $C_R \leq 0.33\ \mu F \geq 36000M\Omega$
   $C_R > 0.33\ \mu F \geq 12000\ s$

AMPE are constructed with metallized polyester film dielectric, tinned copper leads, and a flame retardant epoxy resin coating. They can be used as across-the-line type noise suppression capacitors.

PART NUMBERING SYSTEM

AMPE 393 J 160VAC

Meritek Series

Capacitance

CODE	101	102	103	104	105	106
(pF)	100	1,000	10,000	100,000		
(nF)	---	1	10	100	1000	
(μF)	---	0.001	0.01	0.1	1	10

Tolerance

CODE	J	K	M
Tolerance (%)	± 5	± 10	± 20

Rated Voltage

160 VAC	250 VAC

Tape & Reel/Tape & Ammo available for lead space ≤ 10 mm
Please contact factory for part number

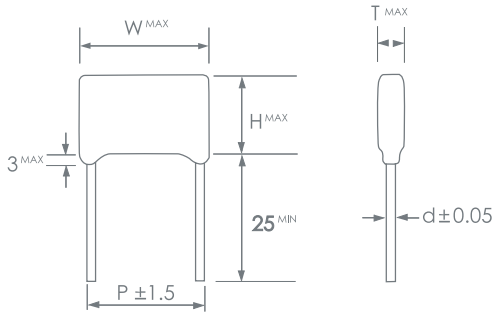

Dimensions in millimeters (mm)

RV	160VAC					250VAC				
DIM. / CAP(μF)	W	H	T	P	dØ	W	H	T	P	dØ
0. 01	12.5	10.5	6.0	8.5	0.6	15.5	11.0	6.0	11.0	0.6
0.012	12.5	10.5	6.5	8.5	0.6	15.5	11.5	6.0	11.0	0.6
0.015	12.5	11.0	6.5	8.5	0.6	15.5	11.5	6.5	11.0	0.6
0.018	12.5	12.0	6.5	8.5	0.6	15.5	11.5	7.0	11.0	0.6
0.022	15.5	10.5	6.0	11.0	0.6	15.5	12.0	7.0	11.0	0.6
0.027	15.5	11.0	6.0	11.0	0.6	15.5	12.0	7.5	11.0	0.6
0.033	15.5	11.0	6.5	11.0	0.6	15.5	12.5	8.0	11.0	0.6
0.039	15.5	12.0	7.0	11.0	0.6	15.5	13.0	8.5	11.0	0.6
0.047	15.5	12.0	7.0	11.0	0.6	18.0	12.5	8.0	13.5	0.6
0.056	15.5	12.5	7.5	11.0	0.6	18.0	13.0	8.5	13.5	0.6
0.068	15.5	12.5	7.5	11.0	0.6	18.0	13.5	9.0	13.5	0.6
0.082	15.5	12.5	8.0	11.0	0.6	18.0	14.0	9.5	13.5	0.6
0.1	20.5	13.0	8.0	15.0	0.6	26.0	14.5	9.0	21.0	0.8
0.12	20.5	13.5	9.0	15.0	0.6	26.0	15.0	9.5	21.0	0.8
0.15	20.5	14.5	9.0	15.0	0.6	26.0	16.5	10.0	21.0	0.8
0.18	20.5	15.0	9.5	15.0	0.6	26.0	17.5	11.0	21.0	0.8
0.22	20.5	16.0	10.5	15.0	0.6	26.0	19.0	12.0	21.0	0.8

RV	160VAC					250VAC				
DIM. / CAP(μF)	W	H	T	P	dØ	W	H	T	P	dØ
0.27	20.5	16.5	11.0	15.0	0.6	26.0	20.0	12.5	21.0	0.8
0.33	26.0	17.0	10.0	21.0	0.8	26.0	20.5	13.5	21.0	0.8
0.39	26.0	18.5	11.0	21.0	0.8	26.0	21.5	14.0	21.0	0.8
0.47	26.0	19.0	11.5	21.0	0.8	37.0	22.5	13.0	31.0	0.8
0.56	26.0	20.5	13.0	21.0	0.8	37.0	23.5	14.0	31.0	0.8
0.68	26.0	21.0	13.5	21.0	0.8	37.0	24.5	15.5	31.0	1.0
0.82	26.0	22.5	15.0	21.0	0.8	37.0	26.0	17.0	31.0	1.0
1.0	37.0	22.0	12.5	31.0	0.8	42.0	26.5	17.0	36.0	1.0
1.2	37.0	23.0	14.0	31.0	0.8	42.0	28.0	18.5	36.0	1.0
1.5	37.0	24.0	15.0	31.0	1.0	42.0	29.0	19.5	36.0	1.0
1.8	37.0	25.0	16.5	31.0	1.0	42.0	30.0	21.0	36.0	1.0
2.2	42.0	25.5	17.0	36.0	1.0	42.0	32.5	23.5	36.0	1.0
2.7	42.0	27.0	18.5	36.0	1.0					
3.3	42.0	28.5	20.5	36.0	1.0					
3.9	42.0	30.0	22.5	36.0	1.0					
4.7	42.0	32.0	24.0	36.0	1.0					